DOUBLE SWING GATE HARDWARE INSTALLATION

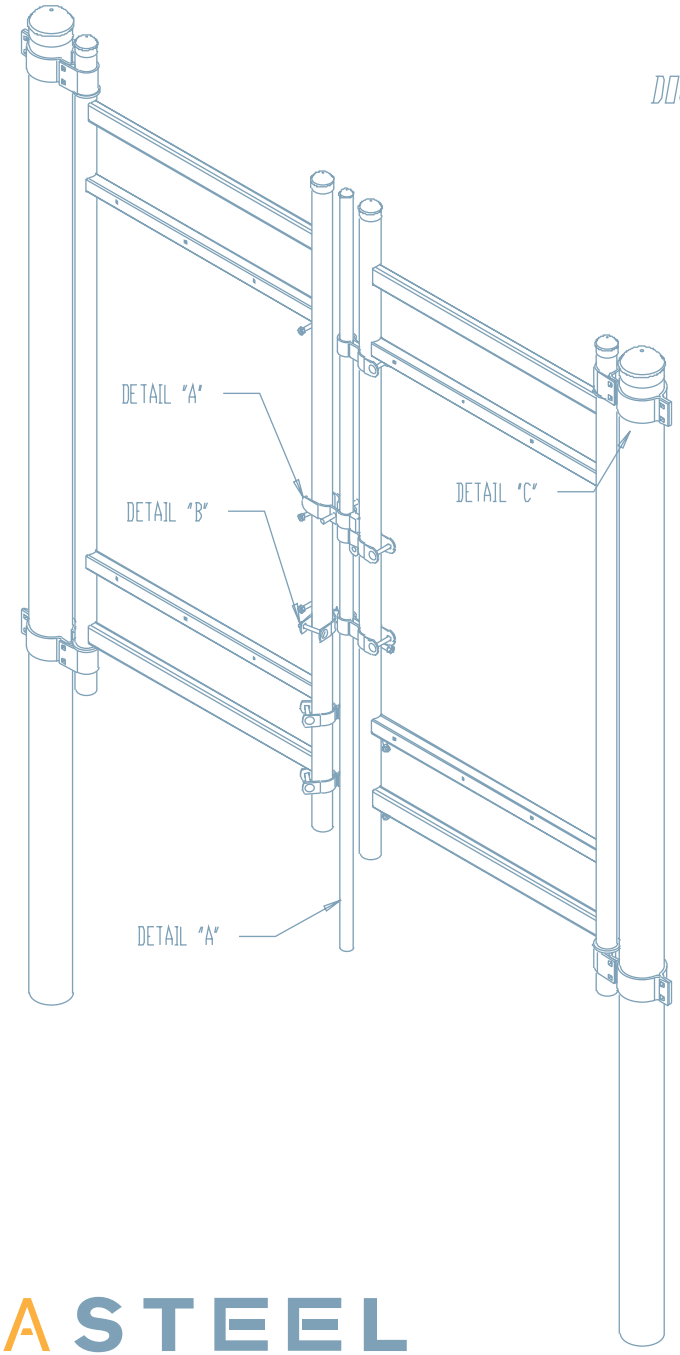

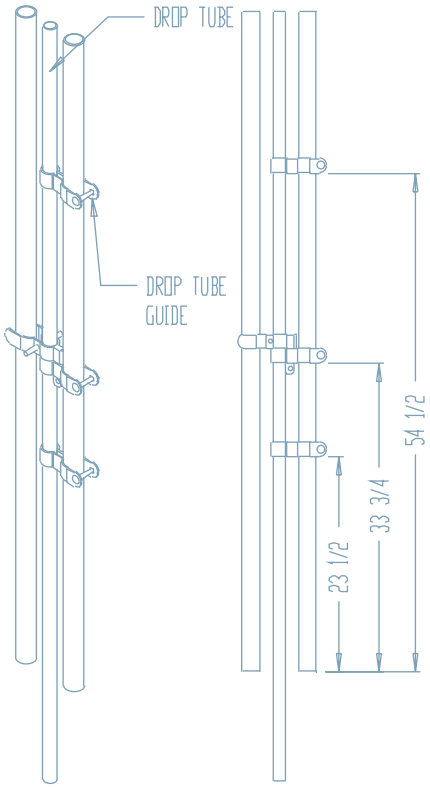

DETAIL "A"
DROP TUBE ASSEMBLY

ATTACH DROP TUBE GUIDE WITH (1) 3/8" X 2-1/2" CARRIAGE BOLT & NUT

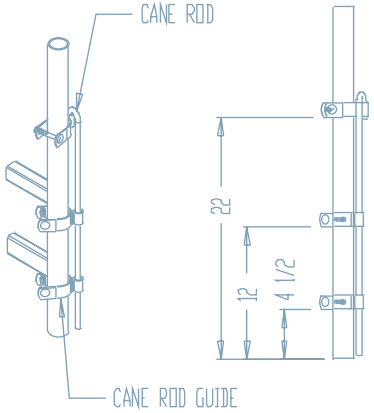

DETAIL "B"
CANE ROD ASSEMBLY

ATTACH CANE ROD GUIDE WITH (1) 3/8" X 2-1/2" CARRIAGE BOLT & NUT

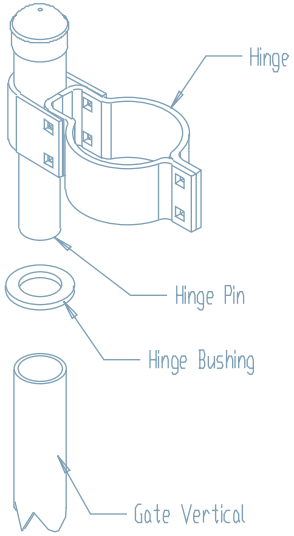

DETAIL "C"
HINGE PIN

BASTEEL
PERIMETER SYSTEMS™